KINGROD

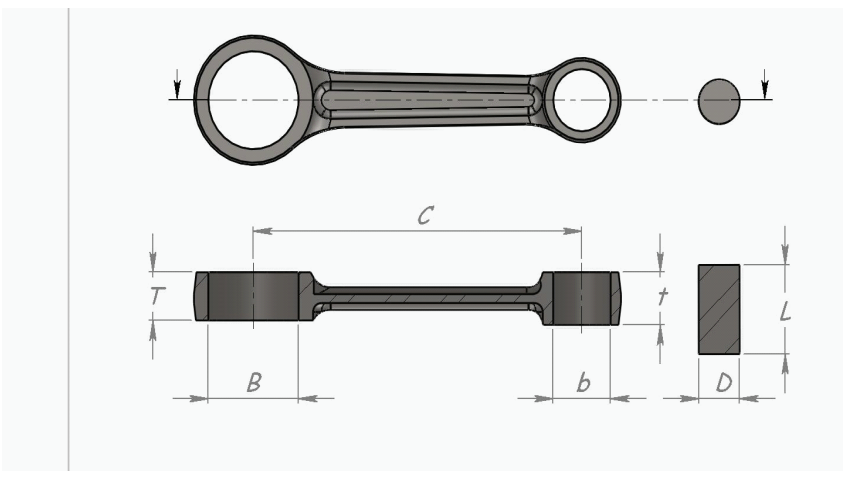

HONDA

	OEM	B	b	C	T	t	D	L
C-50/C-70/C-75	-036-	28.1	13.0	91.0	14.0	14.0	23.0	30.9
DIO/SK-50 W/W	-GW0-	24.0	17.0	80.0	12.0	12.0	18.0	33.0
MB-50/MT-50 W/W	-166-	22.0	17.0	80.0	13.5	13.5	16.0	41.0
MBX-50/MTX-50 W/W	-GE2-	22.0	17.0	91.0	13.5	13.5	16.0	41.0
PC-50K1	-063-	23.6	13.0	78.2	12.0	12.0	16.0	40.0
C-70C/C-90C/C-90IID/JH-70	-GB5-	28.1	13.0	94.0	14.0	14.0	23.0	39.0
C-50B/CD-70C/CD-80	-GB2-	28.1	13.0	93.0	14.0	14.0	23.0	39.0
ELITE-80/CE-80/CH-80	-GE1-	28.1	13.0	59.5	14.0	14.0	23.0	38.5
NH-80/NH-80MD/LEAD-80 W/W	-GC8-	22.0	17.0	91.2	13.5	13.5	16.0	42.0
C-90C,B/C-86Z/GBI//086	-178-	28.1	15.0	91.0	14.0	14.0	23.0	39.0
C-90/CS-90/CT-90	-028-	31.0	14.0	97.0	14.0	14.0	26.0	45.0
C-92/C-95	-GW3-	31.0	14.0	97.0	12.1	12.1	24.0	100.5
NH-90/NH-90H W/W	-GW3-	24.0	17.0	91.5	13.5	13.5	18.0	40.0
C-100E/C90CWR/CD-100/WIN-100	-GF6-	30.1	13.0	94.0	14.0	14.0	25.0	39.0
KARISMA/WAVE110/125	-KFL-	30.1	13.0	100.0	14.0	14.0	25.0	39.0
MB-100/H-100S W/W	-168-	26.0	19.0	100.0	14.0	14.0	20.0	48.0
S-110 DX,NEW/CB-100S	-383-	37.0	15.0	103.5	16.0	16.0	30.0	56.0
WAVE100/EX5/DREAM	-KFM-	30.1	13.0	97.0	14.0	14.0	25.0	39.0
CG-125/CB-125S2	-383-	37.0	15.0	103.5	16.0	16.0	30.0	54.0
CG125 TITAN 2002	-KGA-	36.0	13.0	105.5	16.0	16.0	28.0	54.0
XL-125S/ATC-200 W/W	-437-	38.0	15.0	103.5	16.0	16.0	30.0	54.0
XL-250	KG0	41.0	19.0	116.0	20.0	20.0	33.0	57.5
HX-135/MBX-125/MTX-125 W/W	-KE1-	28.0	16.0	100.0	16.0	16.0	22.0	55.0
GL-145/XL-125R/GL-PRO W/W	-446-	38.0	15.0	103.5	18.0	18.0	30.0	54.0
NSR-150 W/W	-KW6-	31.0	20.0	110.0	17.0	17.0	24.0	51.0
CD-175	-028-	31.0	14.0	97.0	14.0	14.0		
M-100	M100	30.1	13.0	88.0	14.0	14.0	25.1	39.0
M-150	-M-150-							
GL-145	-440-	38.0	15.0	103.5	16.0	16.0	30.0	54.0
GL/ R	446-	38.0	15.0	103.5	16.0	16.0	30.0	54.0
WAVE 125	KPH-	30.1	13.0	100.0	14.0	14.0	25.1	39.0