KINGROD

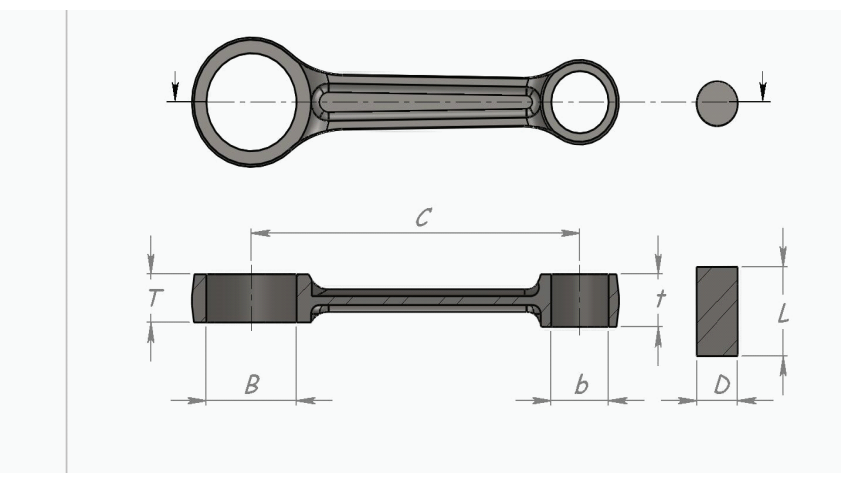

SUZUKI,KAWASAKI,VESPA & OTHER

	OEM	B	b	C	T	t	D	L
A-50/AC-50/AP-50/ MA-50 W/W	-350	22.0	16.0	80.0	12.0	12.0	16.0	46.0
AD-50,60/AE-50,60 W/W	-37B01	22.0	14.0	75.0	12.0	10.0	16.0	34.0
CS-50/GEMMA-50 W/W	-46500	22.0	14.0	80.0	12.0	12.0	16.0	37.0
FB-50	-09811	28.0	12.0	91.5	14.0	11.0	22.0	38.0
F-50/FR-50 W/W	-350	22.0	16.0	80.0	12.0	12.0	16.0	44.0
FA-50/FZ-50 W/W	-04001	21.0	16.0	80.0	10.0	12.0	15.0	40.0
K-50/TS-50ER/RV-50 W/W	-350-	22.0	16.0	80.0	12.0	12.0	16.0	40.0
AY-50/KATANA W/W	-04710	22.0	16.0	80.0	12.0	12.0	16.0	40.0
DS-80/RM-80 W/W	-14001	23.0	16.0	90.0	14.0	14.0	17.0	40.0
A-80/FA-80/FR-80 W/W	-050	25.0	16.0	88.0	16.0	14.0	19.0	50.0
FB-80 I	-02A02	30.0	13.0	86.0	14.0	14.0	24.0	39.0
RC-80 W/W	-35500	26.0	16.0	94.0	16.0	14.0	20.0	45.0
CS-90/GEMMA-80 W/W	-07901	23.0	16.0	85.0	14.0	14.0	17.0	45.0
FB-90	-09D01	31.0	14.0	94.8	14.0	15.0	26.0	40.0
RV-90 W/W	-23000	25.0	15.0	___	16.0	16.0	19.0	47.5
TS-90/TS-100 W/W	-25001	25.0	18.0	100.0	16.0	18.0	19.0	50.0
A-100 W/W	-12002							
B-100P/B-120 W/W	-11001	26.0	18.0	110.0	17.0	17.0	20.0	49.0
FB-100	-30A01	31.0	14.0	___	15.0	15.0	26.0	40.0
GP-100/GP-125 W/W	-12002	25.0	18.0	100.0	16.0	18.0	19.0	50.0
GT-100 W/W	-12002	25.0	18.0	100.0	16.0	18.0	19.0	47.5
AX-100/AX-100D/ TR-S RACER W/W	-23411	26.0	18.0	100.0	17.0	18.0	20.0	50.0
TS-100ERZ/TS-125 ERZ W/W	-12002	25.0	18.0	100.0	16.0	18.0	19.0	52.0
V-100/AG-100 W/W	-04C00	26.0	16.0	94.0	14.0	14.0	20.0	39.0
FD-110XC	-09G00	34.0	14.0	98.0	17.0	14.0	28.0	42.0
GSX-110/FD-110/FD-115 VIVA W/W	-30D01	34.0	14.0	98.0	17.0	14.0	28.0	42.0
RG-110/RU-110 W/W	-21D10	26.0	18.0	94.0	16.0	14.0	20.0	45.0
AX-115S W/W	-05B00	28.0	18.0	100.0	17.0	18.0	22.0	50.0
FX-125	-35C01	36.0	15.0	103.0	16.0	17.0	28.0	53.0
GP-125X4 W/W	-36A10	28.0	18.0	100.0	16.0	18.0	22.0	50.0
GS-125E/GN-125/ SX-125R W/W	-05821	36.0	14.0	___	16.0	17.0	28.0	53.0
GT-125 W/W	-14001	23.0	16.0	90.0	14.0	14.0	___	___
K-125 W/W	-08003	26.0	20.0	117.0	17.0	18.0	20.0	49.0
RG-125FW W/W	-36A10	28.0	18.0	100.0	16.0	18.0	22.0	50.0
RG-V/TX-150 W/W	-12B01	28.0	18.0	105.0	16.0	18.2	22.0	50.0
TR-125 W/W	-12002	25.0	18.0	100.0	16.0	18.0	19.0	50.0
TS-125A W/W	-12002	25.0	18.0	100.0	16.0	18.0	19.0	50.0
TS-125ER W/W	-12002	25.0	18.0	100.0	16.0	18.0	19.0	56.0
TS-125X W/W	-36A10	28.0	18.0	100.0	16.0	18.0	22.0	53.0
TR-Z W/W	-39811	28.0	18.0	100.0	16.0	18.0	22.0	50.0
VS-125	-20E10	36.0	14.0	108.0	16.0	16.0	28.0	46.0
FX-150	-05F00	38.0	16.0	102.5	17.0	18.0	30.0	53.0
VS-150	-20E00	36.0	15.0	106.0	16.0	16.0	28.0	56.0

KINGROD